KJSB

Korean Journal of Sport Biomechanics 2016; 26(4): 353-360
http://dx.doi.org/10.5103/KJSB.2016.26.4.353
http://e-kjsb.org eISSN 2093-9752

ORIGINAL

Relationship between Aiming Patterns and Scores in Archery Shooting

ChengHao Quan[1], Sangmin Lee[1,2]

[1]Institute for Information and Electronics Research (IIER), Inha University, Incheon, South Korea
[2]Department of Electronics Engineering, Inha University, Incheon, South Korea

Received : 30 September 2016
Revised : 08 November 2016
Accepted : 24 November 2016

Corresponding Author
Sangmin Lee
Department of Electronics Engineering, Inha University, 100 Inha-ro, Nam-gu, Incheon, 22212, South Korea
Tel : +82-32-860-7420
Fax : +82-32-868-3654
Email : sanglee@inha.ac.kr

Objective: The aim of this study was to investigate the relationship between aiming patterns and scores in archery shooting.

Method: Four (N = 4) elementary-level archers from middle school participated in this study. Aiming pattern was defined by averaged acceleration data measured from accelerometers attached on the body during the aiming phase in archery shooting. Stepwise multiple regression analysis was used to test whether a model incorporating aiming patterns from all nine accelerometers could predict the scores. In order to extract period of interest (POI) data from raw data, a Dynamic Time Warping (DTW)-based extraction method was presented.

Results: Regression models for all four subjects are conducted with different significance levels and variables. The significance levels of the regression models are 0.12%, 1.61%, 0.55%, and 0.4% respectively; the R^2 of the regression models is 64.04%, 27.93%, 72.02%, and 45.62% respectively; and the maximum significance levels of parameters in the regression models are 1.26%, 4.58%, 5.1%, and 4.98% respectively.

Conclusion: Our results indicated that the relationship between aiming patterns and scores was described by a regression model. Analysis of the significance levels, variables, and parameters of the regression model showed that our approach - regression analysis with DTW - is an effective way to raise scores in archery shooting.

Keywords: Archery, Acceleration, Dynamic Time Warping (DTW), Aiming pattern, Stepwise multiple regression analysis

INTRODUCTION

Advances in recent technology have enabled miniaturization, low power consumption, and wireless communication, which have facilitated the acquisition of basic data (electromyography, movement, etc.) especially for motion analysis in the field of sports science.

A study by Stuart and Atha (1990), which was the first to analyze postural consistency in the field of archery, attached markers on the archer's head and the elbow of the drawing arm, as well as on the bow above where the bow was held by the hand. The authors then recorded the changes in the position of those aforementioned markers with a camera when the bowstring was released, and subsequently analyzed the recorded motion. In a recent study by Ertan (2009), the muscle activation patterns of the M. flexor digitorum superficialis (MFDS) and M. extensor digitorum (MED) in the bow arm during bowstring release were measured by electromyographic (EMG) signals, and the findings were analyzed. In addition, motion analysis was conducted in a study by Horask and Heller (2011) by attaching 20 markers on the hand of the drawing arm (more specifically, the fingers, top of the hand, and wrist) and using eight infrared cameras to record the positional changes in the markers during bowstring release. In short, these studies analyzed the motion of the moment of arrow release and used cameras or EMG signals for data acquisition. Cameras have limited use in places sensitive to light, and it is cumbersome to attach markers. However, motion analysis systems combined with cameras are widely used as analysis tools, and similarly, although there are many tools that analyze EMG signals, these tools require great care with respect to the locations and methods of attaching the electrodes. Consideration must also be given to whether such systems can be easily applied to athletes, in non-laboratory settings, for data acquisition.

A study by Kian, Ghomshe and Norang (2013) also used cameras to analyze the bow arm movements. A recent study by Polak, Kulasa, VencesBrito, Castro and Fernandes (2016) that investigated motion analysis systems showed that various tools or systems are available for motion analysis in the field of sports science, and systems that utilize inertia sensors (acceleration) are quite notable in particular, resulting in a broad range of choice in motion analysis tools.

Despite this fact, a closer look at recent studies in the sports science

Copyright © 2016 Korean Journal of Sport Biomechanics
This is an Open Access article distributed under the terms of the Creative Commons Attribution Non-Commercial License (http://creativecommons.org/licenses/by-nc/3.0/) which permits unrestricted noncommercial use, distribution, and reproduction in any medium, provided the original work is properly cited.

field shows that most of the studies approached their research with traditional methods, which include using EMG signals to analyze the effects of the major upper extremity muscles on the performance outcomes in air pistol shooting (Kim, 2016), using cameras to analyze kinematic characteristics of upper and lower extremity joints in rowing athletes (Kim et al., 2016), and using a force plate to study stability in Taekwondo athletes (Hyun, Kim & Ryew, 2016).

In the present study, compact (37.6 mm x 52 mm x 18.1 mm) and lightweight (34 g) wireless inertial sensors (working range: typical 30 m, battery life: >8 hr) were attached to the body. The method for attaching the sensors involved wrapping the body with a band that was provided and placing the sensor in the band pocket. The sensors were easily attached to different parts of the athlete's body and the motion (acceleration and others) during archery shooting was recorded in real time. Another point that differed from previous studies was that the present study used data of motion defined by aiming pattern during holding and aiming phases immediately prior to releasing the bowstring, lasting about 2 sec, rather than the motion of the moment of arrow release.

The present study was planned for the purpose of investigating the relationship between scores and aiming pattern defined as athlete's motion immediately before the shot. The athlete's raw motion data were acquired using the inertial sensors and the Dynamic Time Warping (DTW) algorithm was used to automatically extract the data to be analyzed, which were then used in multiple regression analysis. Based on the results of the regression analysis, the study was able to identify differences in shooting motions in four athletes, specific body parts that affected scores, and the relative importance of movement of each body part on scores. The approaches used in the present study are expected to be applicable not only in archery, but in various systems for motion analysis in the field of sports science.

METHOD

1. Participants

The participants in the present study consisted of four female junior high school archery team members (age: 16, 14, 15, and 14 yr, mean = 14.75 ± 0.96 yr; height: 158 cm, 157 cm, 171 cm, and 164 cm, mean = 162.5 ± 6.45 cm; weight: 53 kg, 49 kg, 62 kg, and 52 kg, mean = 54 ± 5.60 kg; previous season's score: 59, 59, 55, and 54, mean = 56.75 ± 2.63). All participants were provided with an explanation of the study purpose and procedures prior to the experiment, after which their intent and consent to participate were obtained. The experiment was conducted in the archery range of the school the athletes attended.

2. Measurements

1) Attachment of 3-axis inertial sensors

The present study used a motion -capture system from Noraxon (myoMOTION Research Pro, Noraxon U.S.A., Inc., Scottsdale, AZ, USA, number of sensors: 2~36, myoMOTION S/W included) for acquisition of motion data from the archery athletes. The locations and directions of the inertial sensors attached to the archery athletes were as shown in Figure 1.

An inertial sensor converts changes caused by force or motion into electrical signals and provides various types of information on the object that it is attached to, such as the object's acceleration, angular velocity, speed, distance, and direction. Moreover, the advent of micro-electro mechanical systems has allowed ultra-miniaturization of these sensors. There are accelerator sensors that only detect acceleration or angular velocity, and these sensors are installed into smartphones as basic

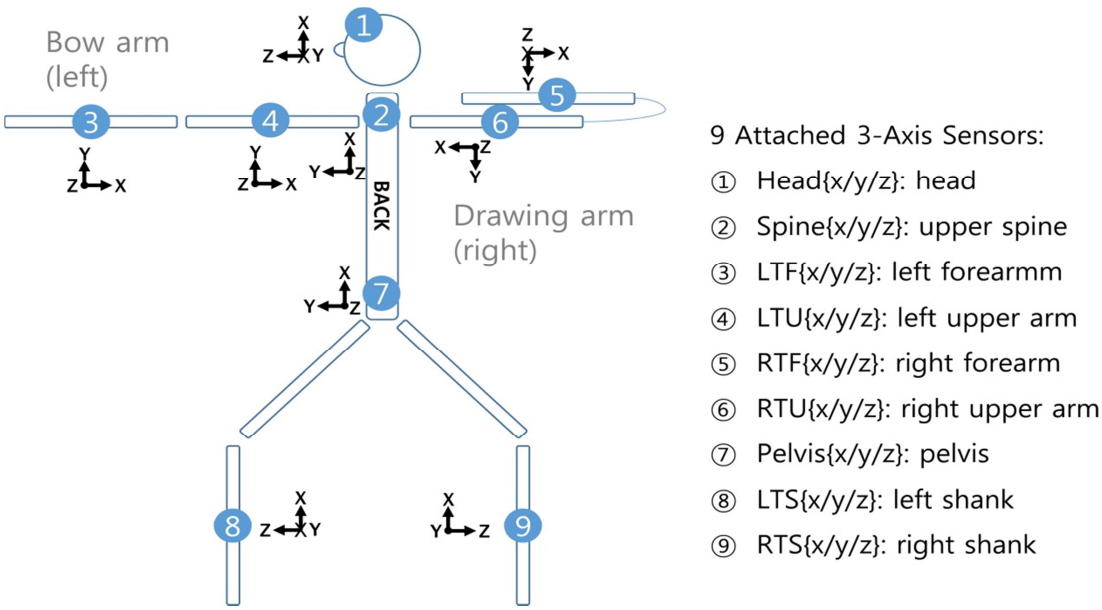

Figure 1. Nine sensors are attached on the head, upper spine, left/right forearms, left/right upper arms, pelvis, and left/right shanks.

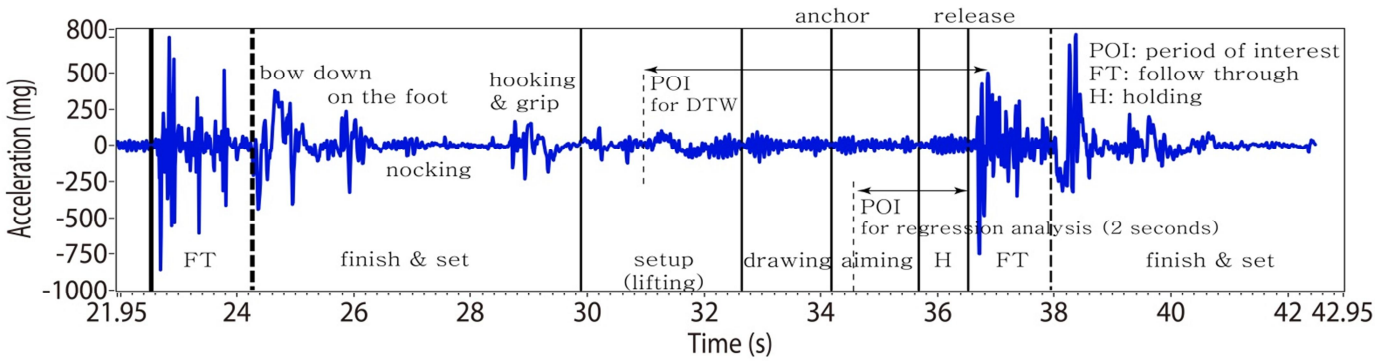

Figure 2. Example of acceleration data (21.95 s ~ 42.95 s): measured bow-forearm movement (x-axis: drawing direction) during successive archery shootings (sampling rate of 100 Hz).

applications and have various functions in everyday life, such as using acceleration data to detect falls and monitoring breathing and sleep patterns during sleep.

In the present study, nine inertial sensors were attached sequentially in the order of head, upper spine, left forearm, left upper arm (bow arm), right forearm, right upper arm (drawing arm), pelvis, left shank, and right shank. The reference names of these inertial sensors used in this manuscript or as variable names in statistical analysis are shown in Figure 1. When an archery shooting position was assumed, the directions of each inertial sensor were as shown in Figure 1. This was because the sensors were attached in an outward direction from the body so that the x-axis of the inertial sensors (marked on the sensor) would be upward and the front can be viewed when standing upright with the hands on the legs.

2) Data acquisition

Each participant shot six arrows consecutively while standing at the shooting line with the inertial sensors attached. The distance to the target was 30 m. After each end, meaning after all six arrows were shot (actually, about 2 min for the archery athletes to walk slowly to the target to retrieve their own arrows and prepare for the next round), a short rest was given, and then the following end began. This experiment was performed six times (ends) for each participant.

In summarizing the data acquired in the present study, since four archery athletes each shot six arrows in six ends, each athlete ended up shooting a total of 36 arrows, and thus the entire data set was 144. In each data set, motion corresponding to nine 3-axis inertial sensors (acceleration value and others) was recorded with a sampling rate of 100 Hz. However, since each of the four archery athletes shot six arrows consecutively, files were saved as ends. Therefore, the initial raw data actually used in the study comprised six files for each athlete (six ends performed) and the total for all four athletes was 24 files. From each of the files that contained six shots, data (generally six data) were extracted from the predetermined period of interest (POI) and used accordingly.

3. Data processing

1) Qualitative analysis of acceleration data during archery shooting motion

Acceleration data during archery shooting motion were qualitatively analyzed. Figure 2 shows the acceleration data of the x-axis of the bow arm (drawing direction) in the period of 21.95~42.95 sec, which was arbitrarily chosen as an example. As shown in the figure, archery shooting motion can be divided as listed below, and using the myo-MOTION S/W supplied by the motion capture system, each period was manually divided while replaying the synchronized video images. The periods were in the order of setup period (raising the bow), drawing period (drawing back the bowstring), anchoring moment (anchoring the bowstring on the face or cheek), aiming period, holding period (mentally focusing before shooting), release moment (releasing the bowstring), and follow-through period (maintaining the position even after releasing the bowstring). Moreover, although they were not included in the POI, the figure also shows motion based on bow down (lowering the bow after shooting), on the foot (immobilizing the bow's tip on the foot), nocking (pulling the arrow from the quiver and loading), and hooking & grip (grabbing the bow and bowstring).

As shown in the figure, the POI can be set differently depending on the purpose and use, and the POI for the DTW algorithm included a part of set up, drawing, aiming, holding, and a part of follow-through periods.

The POI that defined the aiming pattern consisted of the period of about 2 sec right before the movements suddenly became larger after the arrow release. In the present study, the mean value of 200 sample acceleration data from this POI (sampling rate 100 Hz, 2 sec period) was used to define the aiming pattern. Therefore, the aiming pattern of archery athletes was defined by 27 mean acceleration values (nine 3-axis inertial sensors).

2) DTW-based POI extraction

DTW refers to an algorithm that searches for the optimal nonlinear mapping between two given sequences, such as acceleration data

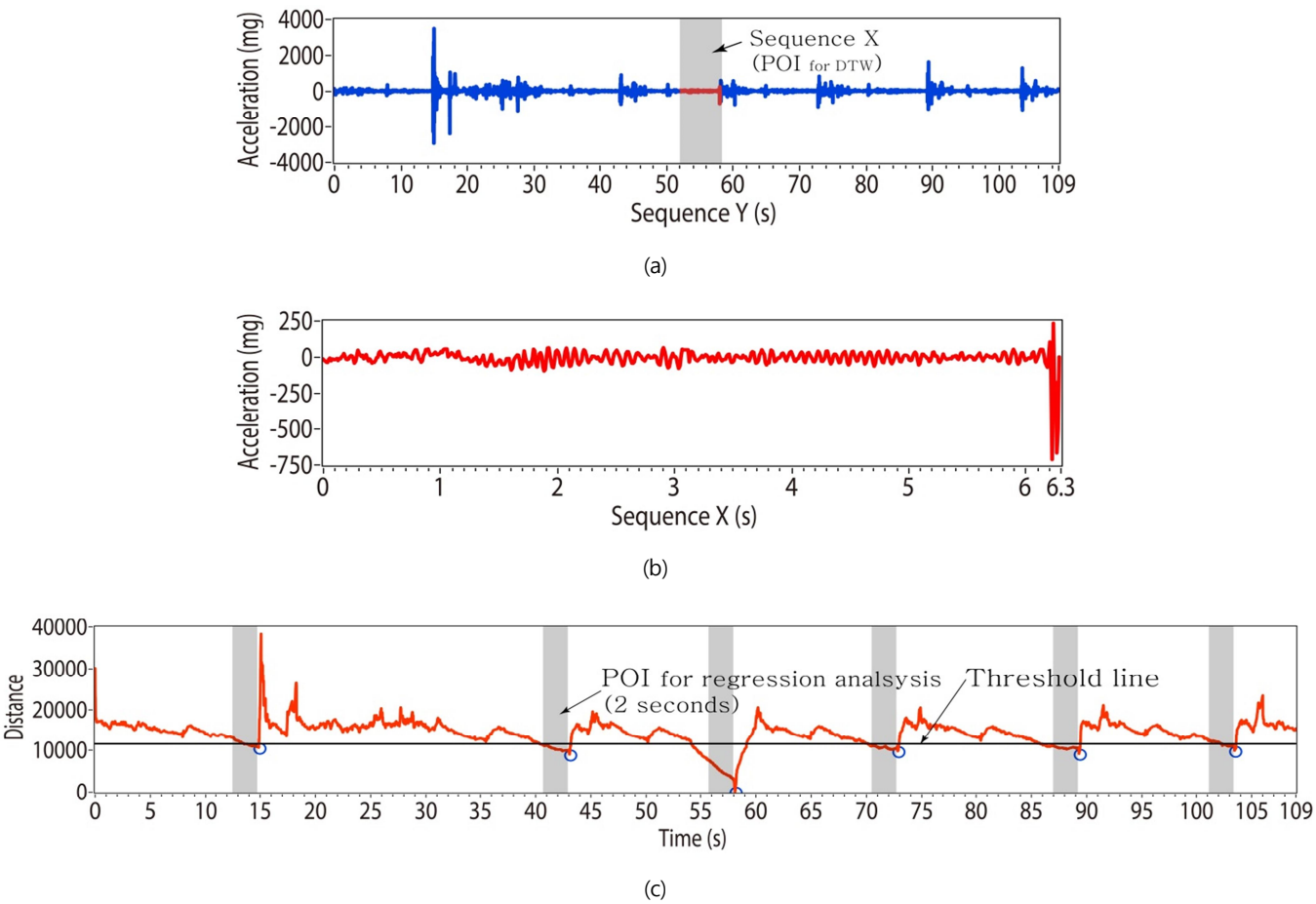

Figure 3. (a) Example of input sequences for DTW: query sequence Y (109.21 s long) for one end acceleration data and reference sequence X (6.3 s long) within POI for DTW indicated by grey region. (b) Zoom out of sequence that corresponds to sequence X of (a). (c) Distance function that corresponds to top row of accumulated cost matrix. Blue small circles indicate six local minima with distance below threshold. Indices of six local minima correspond to end-point of six subsequences in Y. Grey regions indicate the POI for regression analysis.

(Keogh & Ratanamahatana, 2004a). The similarity between two sequences can be quantified by DTW distance (Keogh & Ratanamahatana, 2004b), and in recent times, it has been used for data fusion in multi-sensor systems (Ko, West, Venkatesh & Kumar, 2008). The DTW algorithm is usually used to find one or more other input data (relatively short data, referred to as reference data) from given input data (relatively long data, referred to as query data) in a similar period.

In the present study, the POI for defining the aiming pattern was automatically extracted, using the method below. The first attempt to analyze archery shooting motion by using the DTW algorithm was in a study by Quan, Cho, Kwon and Lee (2016). Figure 3a shows sequence *Y*, query data corresponding to data from one end, and sequence *X*, corresponding to the reference data. Figure 3b is a zoom out view of sequence *X*. In the process of finding sequences that are similar to the reference sequence, the DTW algorithm matches the end points between the sequences first. In Figure 3c, the end points of the searched sequences were marked with circles, and as shown, a total of six such points were found. The period representing 2 sec prior to these six end points is the POI for defining the aiming pattern.

Using the method above, 36, 35, 29, and 33 POIs were extracted from 24 files for each archery athlete and the mean acceleration was calculated to define the aiming pattern. In the first athlete only, 36 POIs corresponding to 36 arrows shot were extracted, whereas 36 POIs were not extracted in the other athletes, either because there were recording errors with the raw data or because automatic extraction by the DTW algorithm was not possible. Therefore, statistical analysis was conducted with 133 data sets, instead of 144 data sets.

4. Stepwise multiple regression analysis

For identification of the relationship between motion in each body part immediately prior to archery shooting (independent variables) and scores (dependent variable), the SAS program (SAS 9.4, SAS Institute Inc., Cary, NC, USA) was used to performed a multiple regression analysis (29 variables: nine 3-axis sensors), and stepwise multiple regression analysis was performed to select the desired regression model. Among the many candidate regression models, the significance level of the regression models was tested and the significance level of each regression coefficient was tested again to derive the final regression models with even lower significance levels, while also presenting the R^2 values

that indicate the explanatory power of the regression model to test the fitness of the models. And also, the regression model based on the mean data of four archery athletes was derived.

RESULTS

1. Regression model for subject 1

The regression model for archery athlete number 1, subject 1 (S1), was derived using the following equation:

y = 9.23181 + 0.30075Headx + 0.1637Headz + 0.36676Spinez - 0.57861LTUy + 0.35798LTUz - 0.1964LTFx + 0.47045LTFy - 0.27257RTFy - 0.96203LTSy + 0.4581RTSy

In the derived regression model, the *F* value was 4.45; significance level (*Pr* > *F*) was 0.12%; R^2 was 64.04%; and adjusted R^2 (Adj R^2) was 49.66%. Summarized parameter estimates were as shown in Table 1. The scores for S1 were explained by motions in the directions of head *x*-axis and *z*-axis, spine *z*-axis, left upper arm *y*-axis and *z*-axis, left forearm *x*-axis and *y*-axis, left shank *y*-axis, and right shank *y*-axis. The relative importance of scores was highest in the left upper arm *y*-axis motion, followed in order by left upper arm *z*-axis, left forearm *y*-axis, left forearm *x*-axis, left shank *y*-axis, spine *z*-axis, right forearm *y*-axis, head *x*-axis, right shank *y*-axis, and head *z*-axis.

Table 1. Summarized parameter estimates of regression model for subject 1

Variable	Parameter estimate	Pr > |t|	Standardized estimate
Intercept	9.23181	<.0001	0
Headx (head *x*-axis motion)	0.30075	0.0126	0.46988
Headz (head *z*-axis motion)	0.16370	0.0077	0.43523
Spinez (spine *z*-axis motion)	0.36676	0.0120	0.59502
LTUy (left upper arm *y*-axis motion)	-0.57861	<.0001	-1.81379
LTUz (left upper arm *z*-axis motion)	0.35798	<.0001	1.38355
LTFx (left forearm *x*-axis motion)	-0.19640	0.0070	-0.75727
LTFy (left forearm *y*-axis motion)	0.47045	0.0043	0.88570
RTFy (right forearm *y*-axis motion)	0.27257	0.0012	-0.59172
LTSy (left shank *y*-axis motion)	-0.96203	0.0004	-0.65046
RTSy (right shank *y*-axis motion)	0.45810	0.0061	0.43936

2. Regression model for subject 2

The regression model for archery athlete number 2, subject 2 (S2), was derived using the following equation:

y = 7.96072 + 0.48902Spiney - 0.34353RTUy + 0.2522Pelvisx

In the derived regression model, the *F* value was 4.01; significance level (*Pr* > *F*) was 1.61%; R^2 was 27.934%; and adjusted R^2 (Adj R^2) was 20.96%. Summarized parameter estimates were as shown in Table 2. The scores for S2 were explained by motions in the directions of spine *y*-axis, right upper arm *y*-axis, and pelvis *x*-axis. The relative importance of scores was highest in the right upper arm *y*-axis motion, followed in order by spine *y*-axis and pelvis *x*-axis.

Table 2. Summarized parameter estimates of regression model for subject 2

Variable	Parameter estimate	Pr > |t|	Standardized estimate
Intercept	7.96072	<.0001	0
Spiney (spine *y*-axis motion)	0.48902	0.0272	0.35943
RTUy (right upper arm *y*-axis motion)	-0.34353	0.0183	-0.42269
Pelvisx (pelvis *x*-axis motion)	0.25220	0.0458	0.34933

3. Regression model for subject 3

The regression model for archery athlete number 3, subject 3 (S3), was derived using the following equation:

y = 13.53636 + 0.93715Heady + 0.38222Headz - 0.5261Spinex + 0.12573LTUx - 0.28437LTUz + 0.33126LTFy - 1.01041LTFz + 0.54082Pelvisx - 1.91363Pelvisy + 0.80894LTSx - 0.80902LTSz

In the derived regression model, the *F* value was 3.98; significance level (*Pr* > *F*) was 0.55%; R^2 was 72.02%; and adjusted R^2 (Adj R^2) was 53.91%. Summarized parameter estimates were as shown in Table 3. The scores for S3 were explained by motions in the directions of head *y*-axis and *z*-axis, spine *x*-axis, left upper arm *x*-axis and *z*-axis, left forearm *y*-axis and *z*-axis, pelvis *x*-axis and *y*-axis, and left shank *x*-axis and *z*-axis. The relative importance of scores was highest in the pelvis *y*-axis motion, followed in order by spine *x*-axis, left forearm *z*-axis, pelvis *x*-axis, head *y*-axis, left upper arm *x*-axis, head *z*-axis, left upper arm *z*-axis, left shank *x*-axis, left shank *z*-axis, and left forearm *y*-axis.

4. Regression model for subject 4

The regression model for archery athlete number 4, subject 4 (S4), was derived using the following equation:

y = 5.50909- 0.17118Spiney + 0.21598RTUx - 0.36731RTUy + 1.19038LTSz + 0.25706RTSy

In the derived regression model, the *F* value was 4.53; significance

Table 3. Summarized parameter estimates of regression model for subject 3

Variable	Parameter estimate	Pr > |t|	Standardized estimate
Intercept	13.53636	<.0001	0
Heady (head *y*-axis motion)	0.93715	0.0023	0.75291
Headz (head *z*-axis motion)	0.38222	0.0255	0.62974
Spinex (spine *x*-axis motion)	-0.52610	0.0010	-0.94452
LTUx (left upper arm *x*-axis motion)	0.12573	0.0017	0.66838
LTUz (left upper arm *z*-axis motion)	-0.28437	0.0080	-0.58772
LTFy (left forearm *y*-axis motion)	0.33126	0.0361	0.36297
LTFz (left forearm *z*-axis motion)	-1.01041	0.0007	-0.82756
Pelvisx (pelvis *x*-axis motion)	0.54082	0.0074	0.78744
Pelvisy (pelvis *y*-axis motion)	-1.91363	<.0001	-1.38881
LTSx (left shank *x*-axis motion)	0.80894	0.0126	0.58198
LTSz (left shank *z*-axis motion)	-0.80902	0.0510	-0.43618

Table 4. Summarized parameter estimates of regression model for subject 4

Variable	Parameter estimate	Pr > |t|	Standardized estimate
Intercept	5.50909	<.0001	0
Spiney (spine *y*-axis motion)	-0.17118	0.0467	-0.33187
RTUx (right upper arm *x*-axis motion)	0.21598	0.0057	0.50498
RTUy (right upper arm *y*-axis motion)	-0.36731	0.0022	-0.60308
LTSz (left shank *z*-axis motion)	1.19038	0.0498	0.36340
RTSy (right shank *y*-axis motion)	0.25706	0.0390	0.31768

Table 5. Summarized parameter estimates of regression model for all subjects

Variable	Parameter estimate	Pr > |t|	Standardized estimate
Intercept	12.28383	0.0004	0
LTFy (left forearm *y*-axis motion)	-0.02485	0.0075	-0.25147
LTSx (left shank *x*-axis motion)	-0.40512	0.0019	-0.97252

level (*Pr* > *F*) was 0.40%; R^2 was 45.62%; and adjusted R^2 (Adj R^2) was 35.54%. Summarized parameter estimates were as shown in Table 4. The scores for S4 were explained by motions in the directions of spine *y*-axis, right upper arm *x*-axis, right upper arm *y*-axis, left shank *z*-axis, and right shank *y*-axis. The relative importance of scores was highest in the right upper arm *y*-axis motion, followed in order by right upper arm *x*-axis, left shank *z*-axis, spine *y*-axis, and right shank *y*-axis.

5. Regression model for all subjects

The regression model based on mean data of all four archery athletes was derived using the following equation:

y = 12.28383- 0.02485LTFy-0.40512LTSx

In the derived regression model, the *F* value was 56898.8; significance level (*Pr* > *F*) was 0.30%; R^2 was ~1; and adjusted R^2 (Adj R^2) was ~1. Summarized parameter estimates were as shown in Table 5. The scores for the athletes were explained by motions in the directions of left forearm *y*-axis and left shank *x*-axis. The relative importance of scores was higher in left shank *x*-axis than left forearm *y*-axis.

DISCUSSION

1. Regression model for each athlete

In the regression equations shown in the previous section, the number of independent variables included in the regression equation for each athlete was different. In other words, the number of statistically significant independent variables that influenced scores (dependent variable) was different among individual athletes (10, 3, 11, and 5). The independent variables represented data of body motions in specific directions, as measured from the points where the sensors were attached. Therefore, these results can be viewed as reflecting the characteristics of individual athletes during archery shooting motion. Consequently, habitual archery shooting motions can be reviewed by the regression parameters.

Based on a review of significance levels of regression coefficients (parameters) and regression equations derived for each athlete, the following differences in significance levels were identified. S1 showed a significant regression coefficient with a low significance level of 1.26%, while S4 showed a significant regression coefficient with a relatively high significance level of 5.10%. An interesting point was that the athletes with higher scores tended to show regression models and coefficients that were significant at relatively low significance levels. An

interpretation of this finding is that, because of the nature of archery, athletes with higher scores tend to have more consistent archery shooting motion, and as a result, similar motions were observed to demonstrate that a regression equation at even a low significance level was suitable. In other words, in archery athletes who have undergone a certain amount of training, their motions can be analyzed by deriving a regression model with the data processing and regression analysis methods used in the present study, as well as by statistical estimates, such as R^2, regression coefficient, and relative importance.

With respect to R^2 values, which indicate what % of variance in the dependent variable can be explained by the independent variables of the regression model, all athletes, except S2 (27.934%), showed very high values (64.04%, 72.02%, and 45.62%). Higher R^2 value indicated greater number of independent variables included in the regression equation. With respect to R^2 values and the number of independent variables, the athletes with R^2 values of 72.02% (S3), 64.04% (S1), and 45.62% (S4) had 11 (excluding the intercept), 10, and five variables, respectively. A higher number of independent variables indicates that archery shooting motions are affected that much more by not only the lower extremities, but by the movements of the head, neck, and lower back as well. However, additional studies are needed to determine which was a more desirable archery shooting posture between S1 and S4.

Regression coefficients can indicate the degree of change in scores when the sensor attached to a corresponding area shows a motion difference of one. However, when comparing the relative importance of independent variables that comprise the regression equation to scores, the standardized estimate must be calculated. This was displayed in the last column of the summarized table of regression models derived in the previous section. Using standardized estimates enabled determination of motion in specific body parts that have a greater effect on scores. Therefore, standardized estimates can serve as another key indicator for examining the habitual shooting motions of archery athletes. A comparison of relative importance (standardized estimates shown in the tables in previous section) between S1 and S4 showed that among the 11 independent variables that affected the scores of S1, the top four variables (LTUy: -1.81379, LTUz: 1.38355, LTFy: 0.88570, LTFx: -0.75727) involved motions in the bow arm (left upper and forearm), meaning that changes in scores can be attributed largely to motions in the bow arm. In contrast, among the five independent variables that affected the scores of S4, the top two variables (RTUy: -0.60308, RTUx: 0.50498) both involved motions in the drawing arm (right upper and forearm), meaning that changes in scores can be attributed to motions in the drawing arm. In other words, the bow arm played a major role in causing changes in scores in S1, while the drawing arm did so in S4, a finding that indicates the need for different training methods for individual athletes.

An interesting point was that the highest values for relative importance on scores in all four athletes were all negative values, regardless of the intercept value (-1.81379, -0.42269, -1.38881, and -0.60308). This indicated that all four participants in the present study can greatly improve their scores merely by reducing the motions represented by the independent variables mentioned above.

Although the number of athletes analyzed was limited to four, based on the results above, it is believed that motions of specific body parts that affected the scores of all four athletes could be determined and that habitual archery shooting motions of each individual contributed to individual differences according to the independent variables in each regression model. The relative importance on scores could be used to determine the specific body parts that contribute greatly to each athlete's scores, and thus, development of individualized training methods for each athlete is deemed necessary.

2. Regression model using the mean values of four athletes

A regression model was derived using the mean data of four archery athletes, which showed that both the regression model and coefficients were significant at a very low significance level (0.75%) and that the motions in body parts that affected scores were LTFy (left forearm) and LTSx (left shank), meaning that the athletes' scores were largely affected by motions in the forearm of the bow arm (y-axis in up and down directions) and the left leg (*x*-axis in up and down directions). All four athletes used their left arm as the bow arm and used the posture of having the left foot more forward than the right foot. The relative importance results showed that leg motions had a 3.87 times greater influence than arm motions (3.86734 = 0.97252/0.25147). This indicated that all four athletes can increase their scores by maintaining improved posture by reducing movements in the legs (lower extremities), more so than the arms. The findings in the present study can be interpreted in terms of the methods mentioned above being applicable in examination of the tendencies of a group of athletes (four in the present study), which means that they can be used to define common postural problems of athletes within the same group, or in contrast, to define a desirable posture. However, more generalized results should be derived through future studies that include larger study populations and that compare more skilled athletes.

CONCLUSION

The present study demonstrated that the relationship between aiming patterns and scores in archery shooting motions can be explained with regression models, and the following results were derived: First, the significance levels of four regression models, one for each athlete, were 0.12%, 1.61%, 0.55%, and 0.4%, which indicated that since the models showed relatively low significance levels (<2%), all of the regression models were significant; second, in the regression models, R^2 values, which indicate what % of variance in the dependent variable can be explained by the independent variables of the regression model, were 64.04%, 27.93%, 72.02%, and 45.62%, and this showed that the all regression models derived, except for that of S2, had very high explanatory power (>40%); third, the maximum significance level of parameters (or regression coefficients) that explain each regression model were 1.26%, 4.58%, 5.1%, and 4.98%, which indicated that parameters of all regression models derived at a significance level of 5%, with the exception of that of S3, were significant; and fourth, relative importance was presented as another key indicator for examining the habitual shooting motions of athletes.

The following conclusions were reached from a stepwise analysis of the regression models: First, different regression models were derived for each of the four athletes, which indicated that having different variables that explain the regression model means that different body parts and directions (one of three axes) affected scores, and this signified that each athlete already had different habitual archery shooting motions and that individualized coaching is possible through analyses of regression model parameters and relative importance; second, the limitations in the present study were also identified. Additional future studies are needed on statistical analysis and data processing of low R^2 values in the regression models and generalization of desirable archery shooting position.

Finally, statistical analysis using regression analysis and data based on the DTW algorithm, as suggested in the present study, is expected to be a useful method for the effective analysis of individualized score improvement measures in archery. Moreover, the approaches used in the present study may not only be used for motion analysis in archery, but may also have applications in various systems in the field of sports science.

ACKNOWLEDGEMENTS

This research was supported by the Basic Science Research Program through the NRF (National Research Foundation of Korea) funded by the Ministry of Education (2010-0020163) and by the MSIP (Ministry of Science, ICT and Future Planning), Korea, under the ITRC (Information Technology Research Center) support program (IITP-2016-H8601-16-1003) supervised by the IITP (Institute for Information & Communications Technology Promotion).

REFERENCES

Ertan, H. (2009). Muscular activation patterns of the bow arm in recurve archery. *Journal of Science and Medicine in Sport*, *12*(3), 357-360. doi: http://dx.doi.org/10.1016/j.jsams.2008.01.003

Horsak, B. & Heller, M. (2011). A three-dimensional analysis of finger and bow string movements during the release in archery. [Article]. *Journal of Applied Biomechanics*, *27*(2), 151-160.

Hyun, S.-H., Kim, Y.-P. & Ryew, C.-C. (2016). Effects of Fatigue Induction on Ground Reaction Force Components, Postural Stability, and Vertical Jump Performance in Taekwondo Athletes. *Korean Journal of Sport Biomechanics*, *26*(2), 143-151. doi: 10.5103/KJSB.2016.26.2.143

Keogh, E. & Ratanamahatana, A. (2004). Everything you know about dynamic time warping is wrong. *3rd Workshop on Mining Temporal and Sequential Data, in conjunction with 10th ACM SIGKDD Int. Conf. Knowledge Discovery and Data Mining (KDD-2004), Seattle, WA*. doi: citeulike-article-id:3463163

Keogh, E. & Ratanamahatana, A. C. (2004). Exact indexing of dynamic time warping. [journal article]. *Knowledge and Information Systems*, *7*(3), 358-386. doi: 10.1007/s10115-004-0154-9

Kian, A., Ghomshe, F. T. & Norang, Z. (2013). Comparing the ability of controlling the bow hand during aiming phase between two elite and beginner female compound archers: A case study. *European Journal of Experimental Biology*, *3*(4), 103-111.

Kim, J.-S., Cho, H., Han, B.-R., Yoon, S.-Y., Park, S., Cho, H., . . . Lee, H.-D. (2016). Comparison of Biomechanical Characteristics of Rowing Performance between Elite and Non-Elite Scull Rowers: A Pilot Study. *Korean Journal of Sport Biomechanics*, *26*(1), 21-30. doi: 10.5103/KJSB.2016.26.1.21

Kim, M.-S. (2016). The Kinematic Factors of Physical Motions During Air Pistol Shooting. *Korean Journal of Sport Biomechanics*, *26*(2), 197-204. doi: 10.5103/KJSB.2016.26.2.197

Ko, M. H., West, G., Venkatesh, S. & Kumar, M. (2008). Using dynamic time warping for online temporal fusion in multisensor systems. *Information Fusion*, *9*(3), 370-388. doi: http://dx.doi.org/10.1016/j.inffus.2006.08.002

Polak, E., Kulasa, J., VencesBrito, A., Castro, M. A. & Fernandes, O. (2016). Motion analysis systems as optimization training tools in combat sports and martial arts. *Revista de Artes Marciales Asiáticas*, *10*(2), 105-123.

Quan, C.-H., Cho, W.-H., Kwon, J. & Lee, S. (2016). A Method for Measuring Similarity of Movement during Archery Shooting. *International Conference on Information, System and Convergence Applications (ICISCA 2016)*, Chiang Mai.

Stuart, J. & Atha, J. (1990). Postural consistency in skilled archers. *Journal of Sports Sciences*, *8*(3), 223-234. doi: 10.1080/02640419008732148